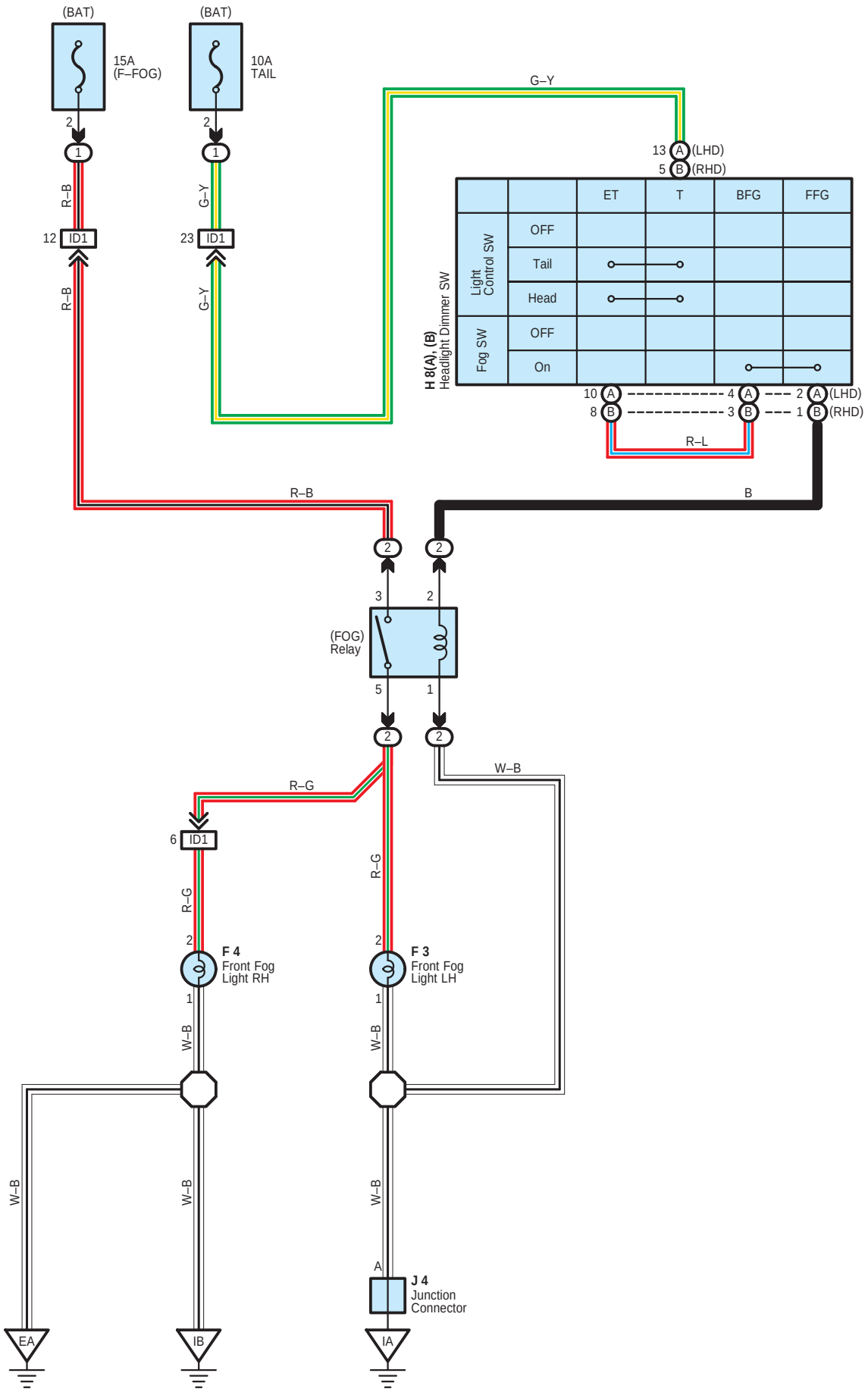
(BAT)
15A
(F–FOG)
(BAT)
10A
TAIL
G–Y
13 A (LHD)
5 B (RHD)
ET
T
BFG
FFG
Light Control SW
OFF
Tail
Head
Fog SW
OFF
On
H 8(A), (B)
Headlight Dimmer SW
10 A
8 B
4 A
3 B
2 A (LHD)
1 B (RHD)
R–L
R–B
G–Y
12 ID1
23 ID1
R–B
G–Y
R–B
B
(FOG)
Relay
R–G
W–B
6 ID1
R–G
R–G
F 4
Front Fog
Light RH
F 3
Front Fog
Light LH
W–B
W–B
W–B
W–B
W–B
J 4
Junction
Connector
EA
IB
IA

○ : **Parts Location**

Code	See Page	Code		See Page	Code		See Page
F3	24 (*1)	F4		32 (*3)	H8	B	38 (*6)
	32 (*3)			34 (*4)	J4		29 (LHD)
	34 (*4)	H8	A	28 (LHD)			37 (*5)
F4	24 (*1)		B	36 (*5)			39 (*6)

▭ : **Relay Blocks**

Code	See Page	Relay Blocks (Relay Block Location)
1	22	Engine Room R/B (Engine Compartment Right)
2	23 (LHD)	Fuse Block (Left Kick Panel)
	23 (RHD)	Fuse Block (Right Kick Panel)

▭ : **Connector Joining Wire Harness and Wire Harness**

Code	See Page	Joining Wire Harness and Wire Harness (Connector Location)
ID1	44 (LHD)	Engine Room Main Wire and Instrument Panel Wire (Right Kick Panel)
	48 (*5)	Engine Room Main Wire and Instrument Panel Wire (Cowl Side Panel RH)
	49 (*6)	

▽ : **Ground Points**

Code	See Page	Ground Points Location
EA	42 (*1)	Right Fender Apron
	46 (*3)	
	47 (*4)	
IA	44 (LHD)	Right Kick Panel
	48 (*5)	Left Kick Panel
	49 (*6)	
IB	44 (LHD)	Cowl Side Panel RH
	48 (*5)	
	49 (*6)	

* 1 : LHD 3SZ–VE * 2 : LHD K3–VE * 3 : RHD 3SZ–VE * 4 : RHD K3–VE * 5 : RHD w/ Heater * 6 : RHD w/o Heater